MIC Japan

ISDB-T

Introduction of Next Generation Digital Terrestrial Television Broadcasting in Japan

11/30/2020-12/3/2020

Ministry of Internal Affairs and Communications, Japan

Introduction

In Japan, next generation digital terrestrial television broadcasting systems are now under development. These systems are designed to be able to transmit up to 8K programs.

Also, Integrated Broadcast-Broadband services will be achieved through next generation systems.

Specifically, Japan is conducting trial tests of the following three new ISDB-T systems to determine the next generation digital terrestrial television broadcasting standard.

(1) New ISDB-T system-A (35 segments method)

(2) New ISDB-T system-B (13 segments method)

(3) New ISDB-T system-C (LDM method)

The outline of these three systems is shown as follows.

Outline of New ISDB-T Systems

The following table shows the differences between the specifications of the three new ISDB-T systems and the current ISDB-T.

Method	ISDB-T	New ISDB-T system-A	New ISDB-T system-B	New ISDB-T system-C
Service	2K	2K, 4K, 8K	2K, 4K	2K, 4K
Segment	13	35	13	13 (UL, LL)
Modulation	QPSK 16,64QAM	QPSK,16,64 256,1024,4096	QPSK,16,64 256,1024,4096	QPSK,16,64 256,1024,4096
Constellation	UC	NUC	NUC	NUC
Error Correction	RS+convolutional	LDPC+BCH	LDPC+BCH	LDPC+BCH
Video Coding	MPEG-2	HEVC, VVC	VVC	HEVC, VVC
Transmission	SISO	SISO or MIMO	SISO or MIMO	SISO
Compatibility with ISDB-T Rec.	---	No	Yes	Yes
Bandwidth	6MHz	6MHz	6MHz	6MHz
Example	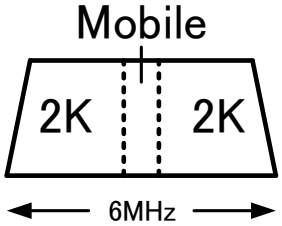	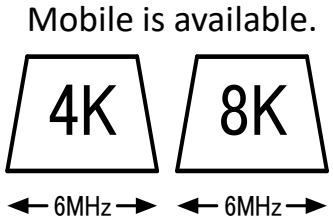	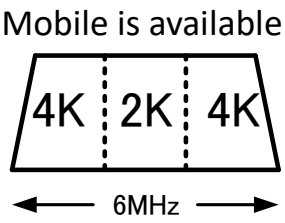	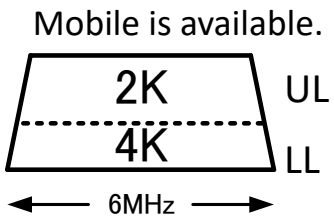

New ISDB-T system-A

Proposed by NHK

New ISDB-T system-A by SISO

35 segment structure

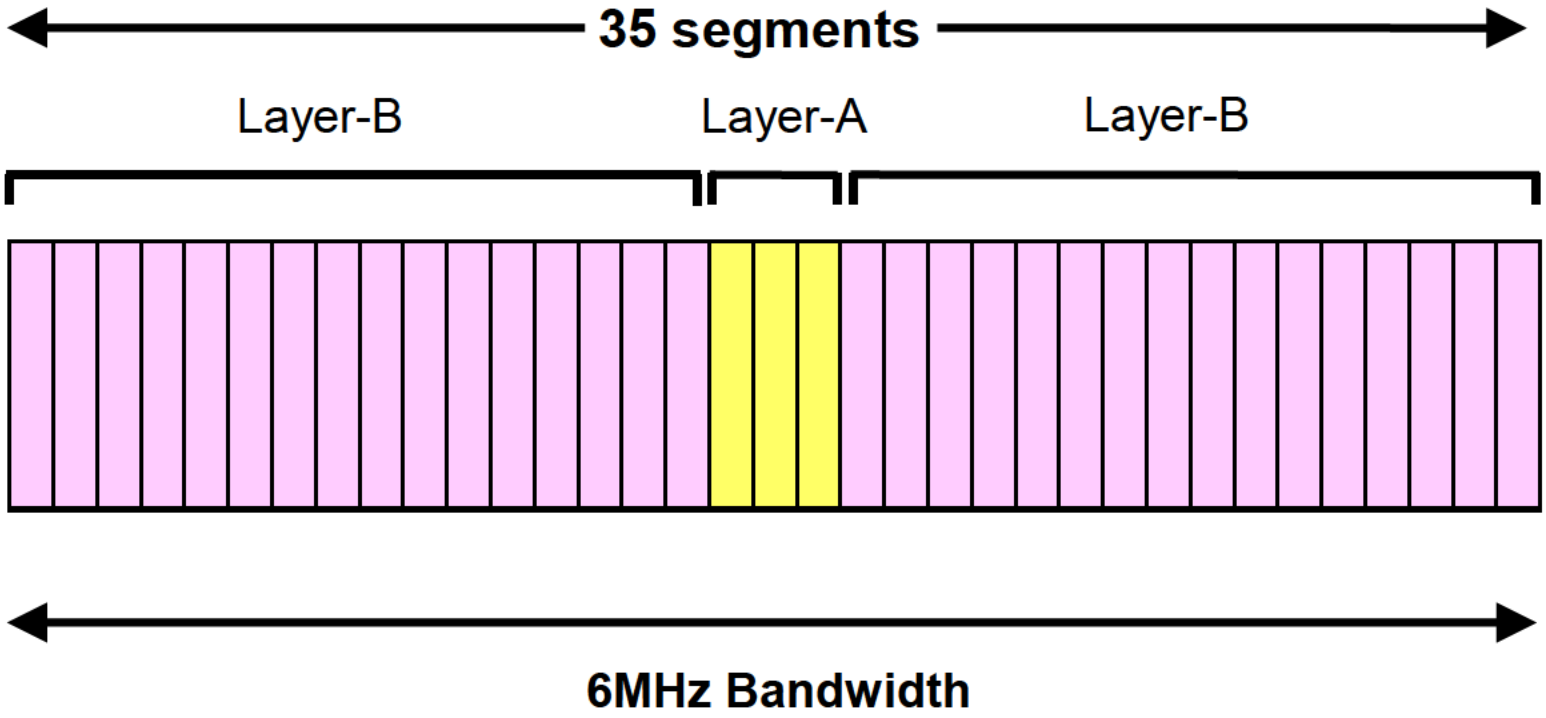

New ISDB-T system-A by SISO

New ISDB-T system-A by SISO

Transmission Parameters

Layer	Segment	Mod	FEC	Video Coding	Remarks
Layer-A Mobile	3	QPSK 16QAM	BCH+LDPC	HEVC VVC	new service
Layer-B 2K PGM 4K PGM	32	QPSK 16QAM 64QAM 256QAM 1024QAM 4096QAM	BCH+LDPC	HEVC VVC	new service

New ISDB-T system-A by SISO

Comparison table between the current ISDB-T and New ISDB-T system-A

	ISDB-T	New ISDB-T system-A
FFT Size	1,024, 4096, 8,192	8,192, 16,384, 32,768
Segmentation No	14	36
Segment Number	13	35
Bandwidth	5.57MHz	5.83MHz
Layer Number	Up to 3	Up to 3
Layer-A	1	1 to 9
FFT Sample Freq.	512/63	512/81
Guard Interval	1/4, 1/8, 1/16, 1/32	1/4, 1/8, 1/16, 1/32, 1/256, 800/FFT size
Modulation	QPSK, 16QAM, 64QAM	QPSK, 16QAM, 64QAM 256, 1024, 4096QAM
Error Correction	RS + convolutional code	BCH + LDPC
Transmission Sys.	SISO	SISO and MIMO

New ISDB-T system-A by SISO

Comparison table between DVB-T2, ATSC3.0 and New ISDB-T system-A.

	DVB-T2	ATSC3.0	New ISDB-T system-A
Structure	TDM	TDM/LDM	FDM
FEC	LDPC + BCH	LDPC + BCH	LDPC + BCH
Modulation	QPSK to 256QAM	QPSK to4096QAM	QPSK to 4096QAM
Constellation	UC	NUC	NUC
Bandwidth	8MHz	6MHz	6MHz
Capacity	Up to 37.93Mbps	Up to 57.9Mbps	Up to 56.7Mbps
Multiplexing	TS base	IP base	IP base
Hierarchical	Fixed	Fixed	Layer-A & B
IBB*	Broadband	Broadband	Broadband
Stability reception	Expensive due to different process between mobile and fixed reception		Stable by FDM

*IBB: Integrated Broadcast-Broadband

New ISDB-T system-B

Proposed by Kansai Television Co. Ltd.

New ISDB-T system-B

Structure of SISO

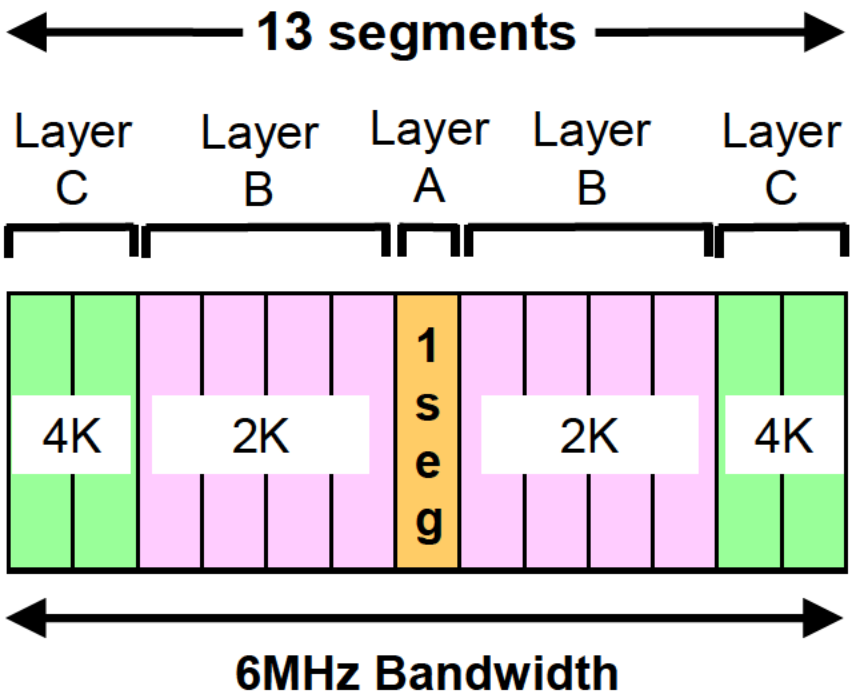

Structure of MIMO

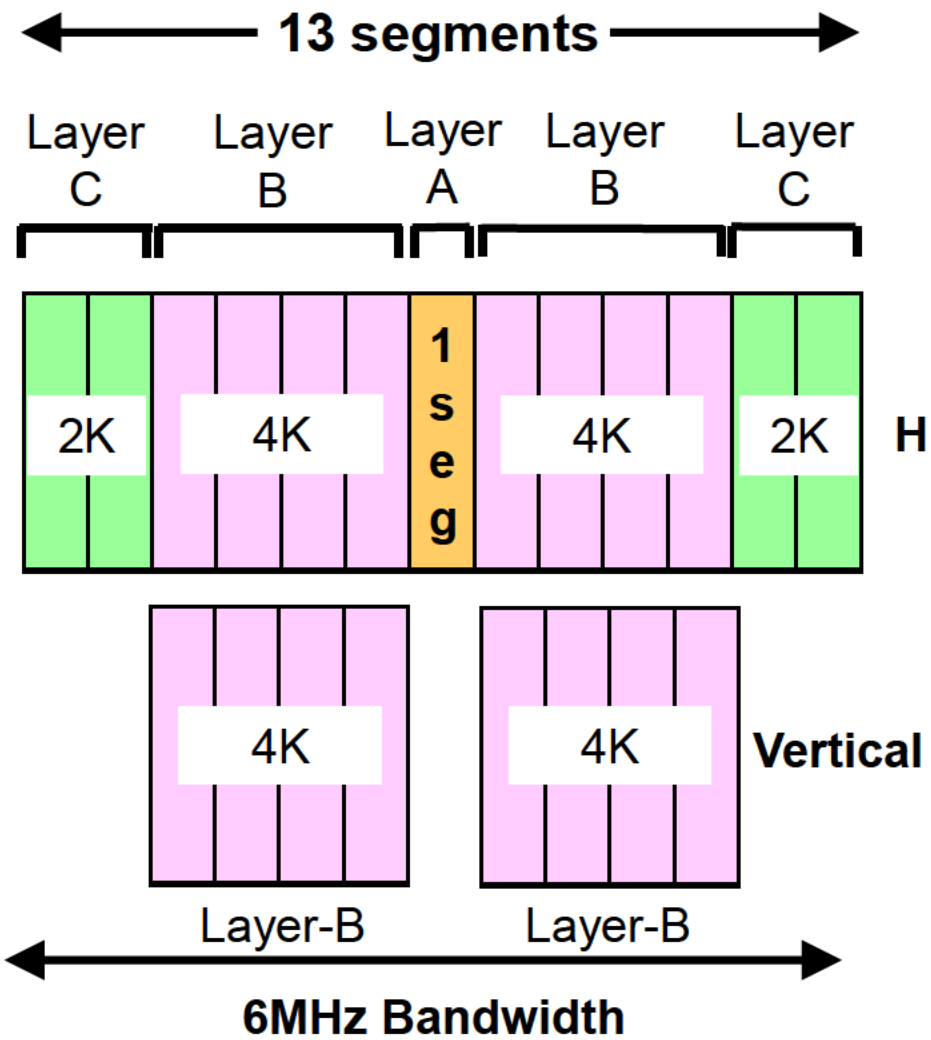

New ISDB-T system-B by SISO

Transmission Structure and Parameter of 3 layer SISO

VVC Video coding is required for 4K PGM.

Transmission Structure

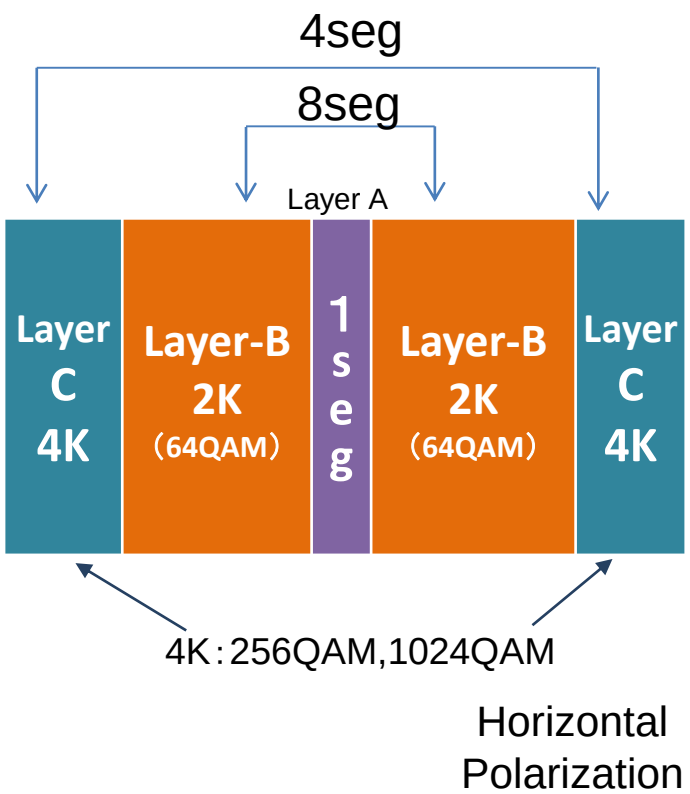

Transmission Parameters

Layer	Segment Number	Carrier Modulation	Error collection	Coding rate	MAX. TS Rate [Mbps]
Layer A Mobile	1	QPSK	RS+ Convolutio -nal code	2/3	0.416
Layer B 2K	8	64QAM	RS+ Convolutio -nal code	3/4	11.234
Layer C 4K	4	256 QAM	BCH+ LDPC	12/16 NUC	8.094
		1024 QAM	BCH+ LDPC	12/16 NUC	10.118
		4096 QAM	BCH+ LDPC	12/16 NUC	12.141

New ISDB-T system-B by MIMO

- Decreased 2K signal segments with new encoder (13.5MBps>9.5MBps, 12seg>7seg)
- Compressed bit rate of 4K signal with new encoder (35MBps>17MBps)
- Increased bit rate via Super Multi level technology (64QAM->1024/4096QAM)
- Expand channel via MIMO tech (Add vertical wave)

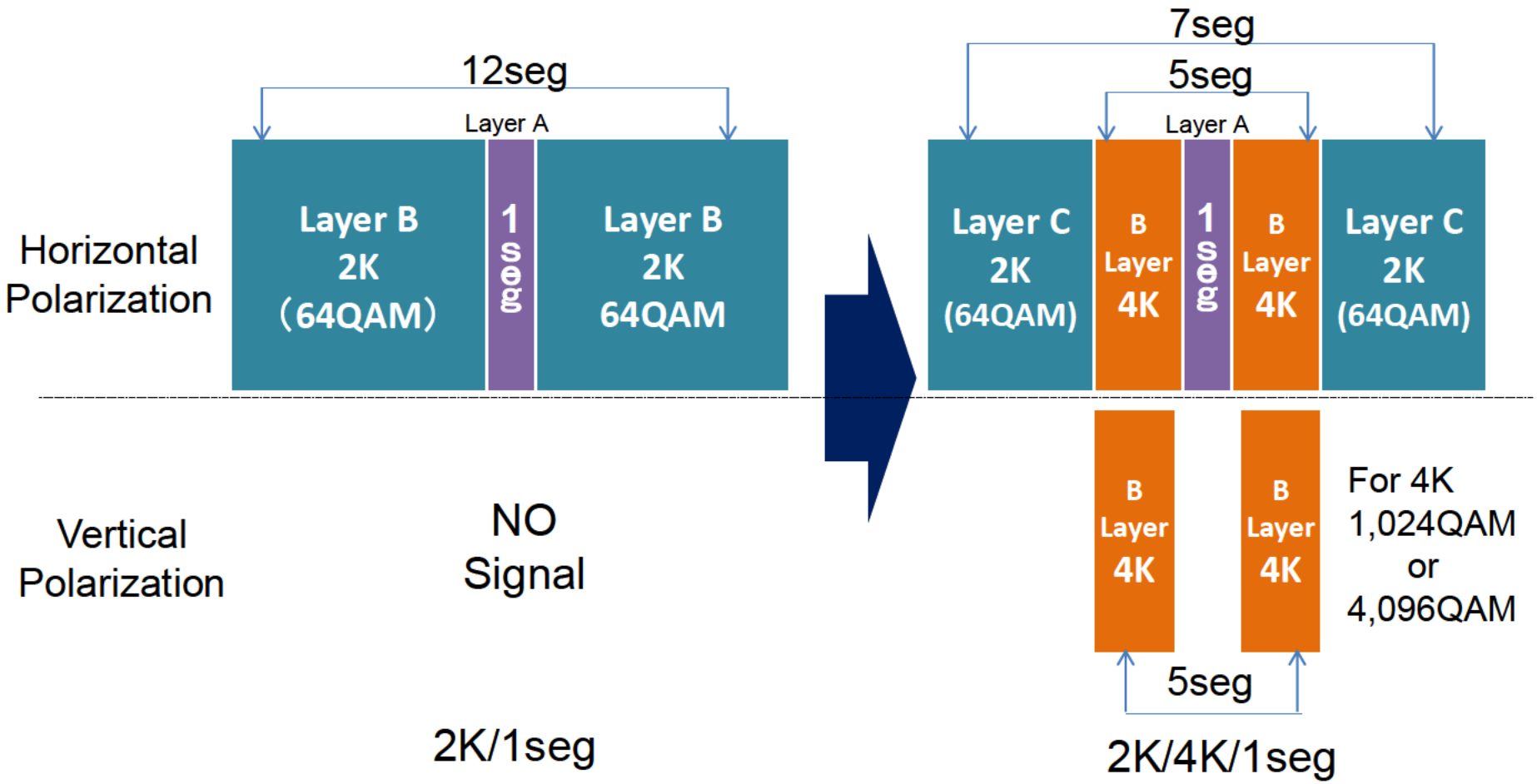

New ISDB-T system-C

Proposed by Tokyo Broadcasting System Television, Inc.

New ISDB-T system-C

LDM: Layered Division Multiplexing

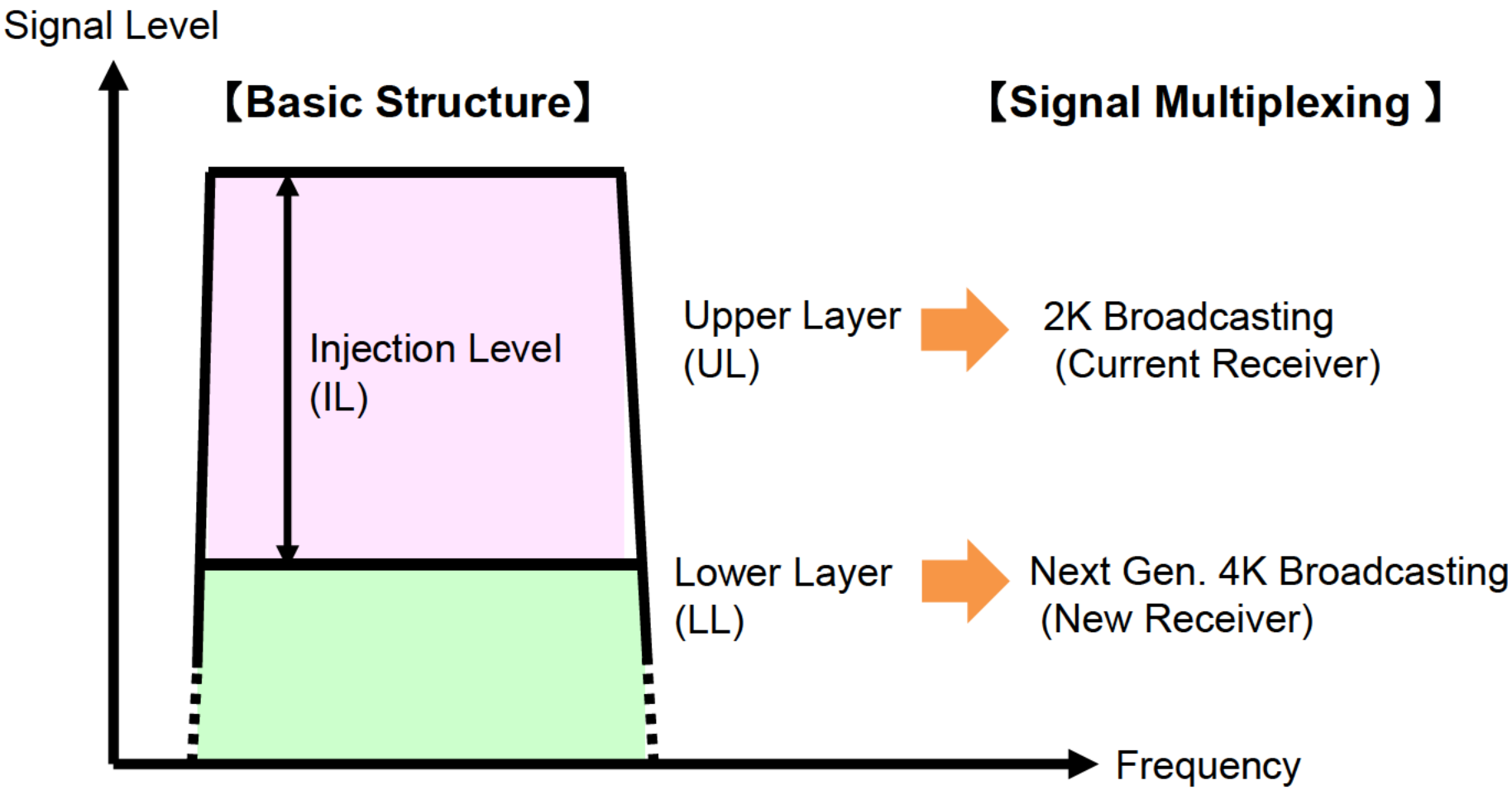

16th/Mar/2018 Refer from
"Research and development about the advancement of the broadcast "
Published by Ministry of Internal Affairs and Communications

New ISDB-T system-C

LDM: Layered Division Multiplexing

LDM structure

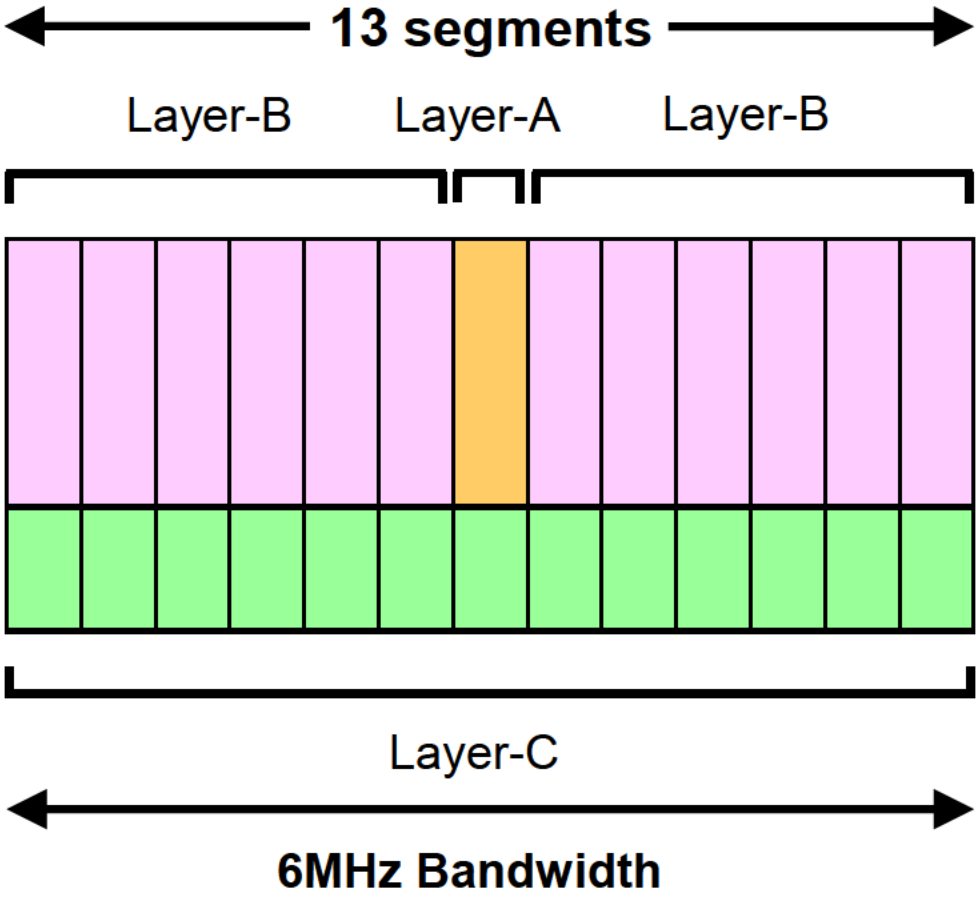

Upper Layer hierarchy (Existing ISDB-T)

Lower Layer hierarchy (New 4K service)

New ISDB-T system-C

LDM: Layered Division Multiplexing

Transmission Parameters

Layer	Segment	Mod	FEC	Video Coding	Remarks
Layer-A UL hierarchy Mobile	1 Upper	QPSK	RS+ Convolutional Code	H.264	mode-3
Layer-B UL hierarchy 2K PGM	12 Upper	64QAM 16QAM	RS+ Convolutional Code	H.264	mode-3
Layer-C LL hierarchy 4K PGM	13 Lower	QPSK 16QAM 64QAM 256QAM 1024QAM 4096QAM	BCH+ LDPC	HEVC VVC	new service

Migration to 4K Broadcasting with LDM Technology

- Parameter adjustment of UL (2K Broadcasting)
- Output power of IL is decreased gradually and output power of LL is increased for the expansion of 4K service area.

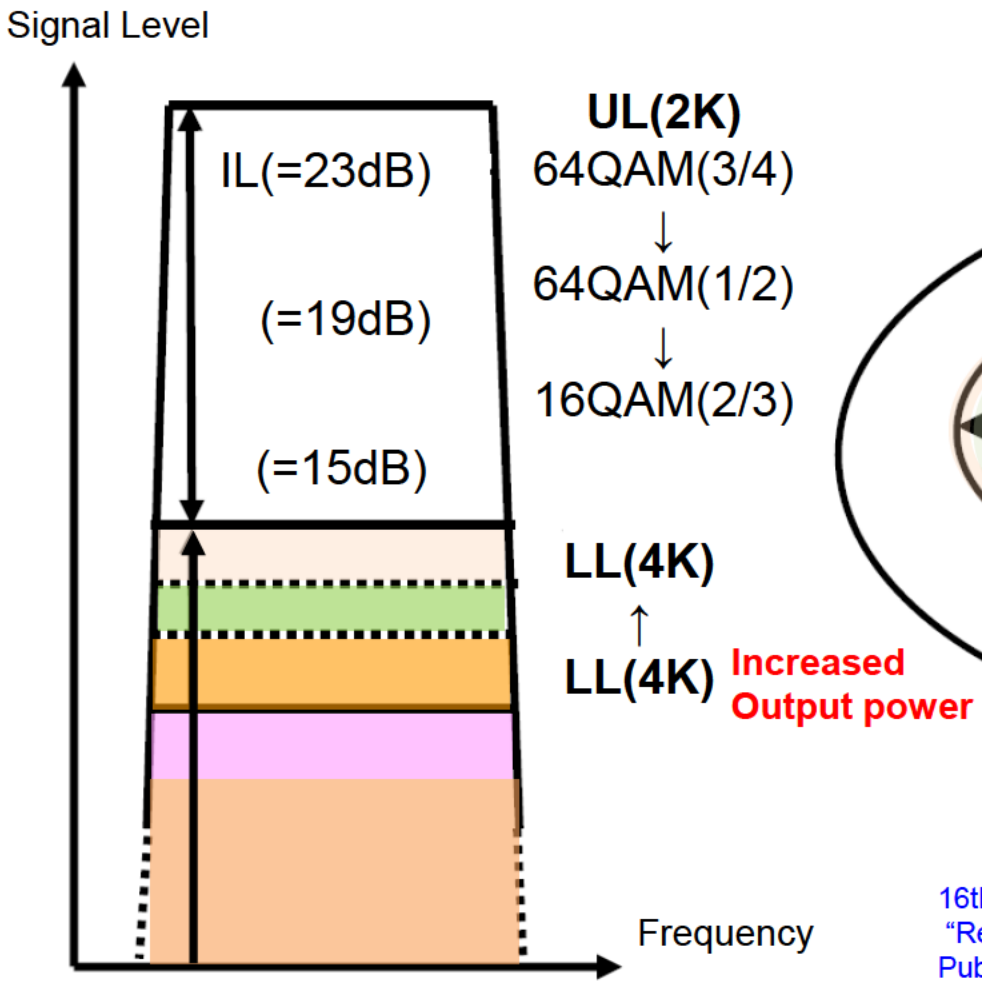

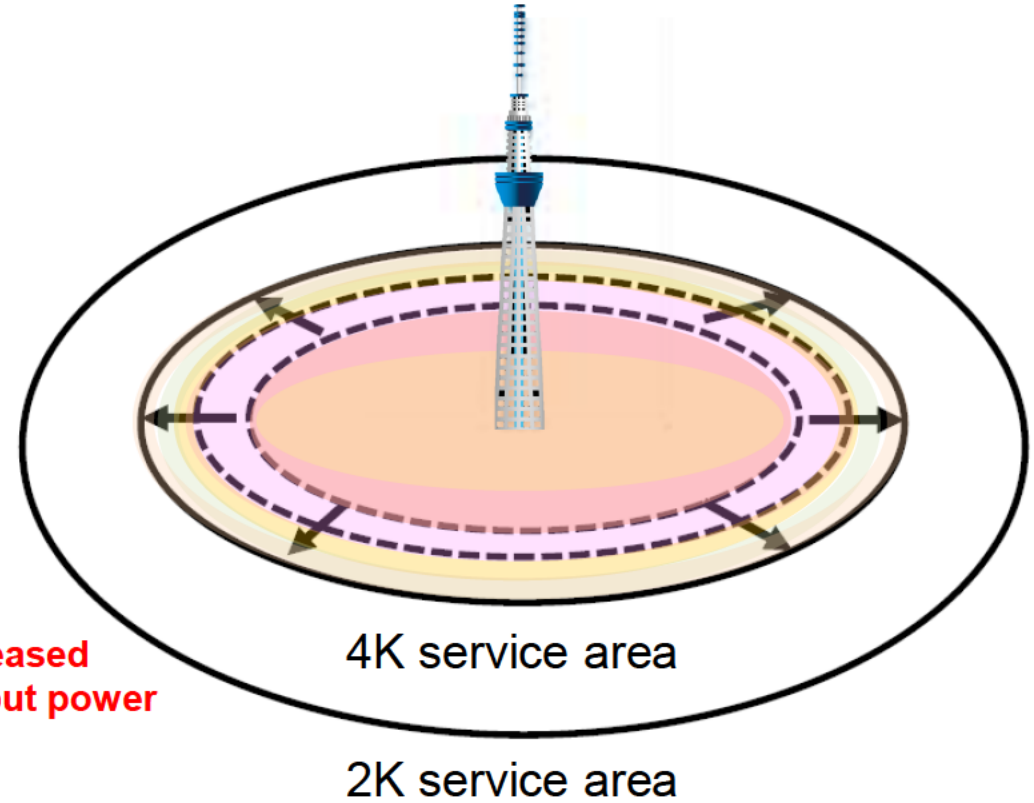

16th/Mar/2018 Refer from
"Research and development about the advancement of the broadcast "
Published by Ministry of Internal Affairs and Communications

ISDB-T

Muito Obrigado!

Contact: btd_i@ml.soumu.go.jp